BICYCLE RACK DESIGNS

PREFERRED "U Rack" DESIGN

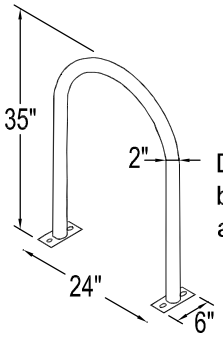

Dimensions vary by manufacturer and model.

ACCEPTABLE DESIGNS

Golden Triangle BID Style

Downtown BID Style

UNACCEPTABLE DESIGNS

This type of rack can bend the wheel.

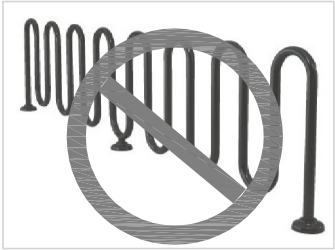

This type of rack does not support the bicycle frame in at least 2 places.

RACK ELEMENTS

The rack must:

- Support the bicycle frame in at least 2 places, allowing the frame and wheel to be locked using a U-lock or cable lock.
- Prevent the wheel of the bicycle from tipping over.
- Not damage the bicycle.
- Be durable and securely anchored.
- Allow front-in or back-in parking.

BICYCLE PARKING RACK PLACEMENT

RACK PLACEMENT RULES:

5' from:
Fire hydrant
Crosswalk

4' from:
Loading zone
Bus stop
Bus shelter
Bus bench

Min. 2', Rec. 3' from:
Curb

3' from:
Parking meter
Newspaper rack
US mailbox
Light pole
Sign pole
Driveway
Tree space
Trash can
Utility meter
Manhole
Other street furniture
Other sidewalk obstructions

WALL SETBACKS
For racks set parallel to a wall:
Min. 24", Rec. 36"
For racks set perpendicular to a wall:
Min. 28", Rec. 36"

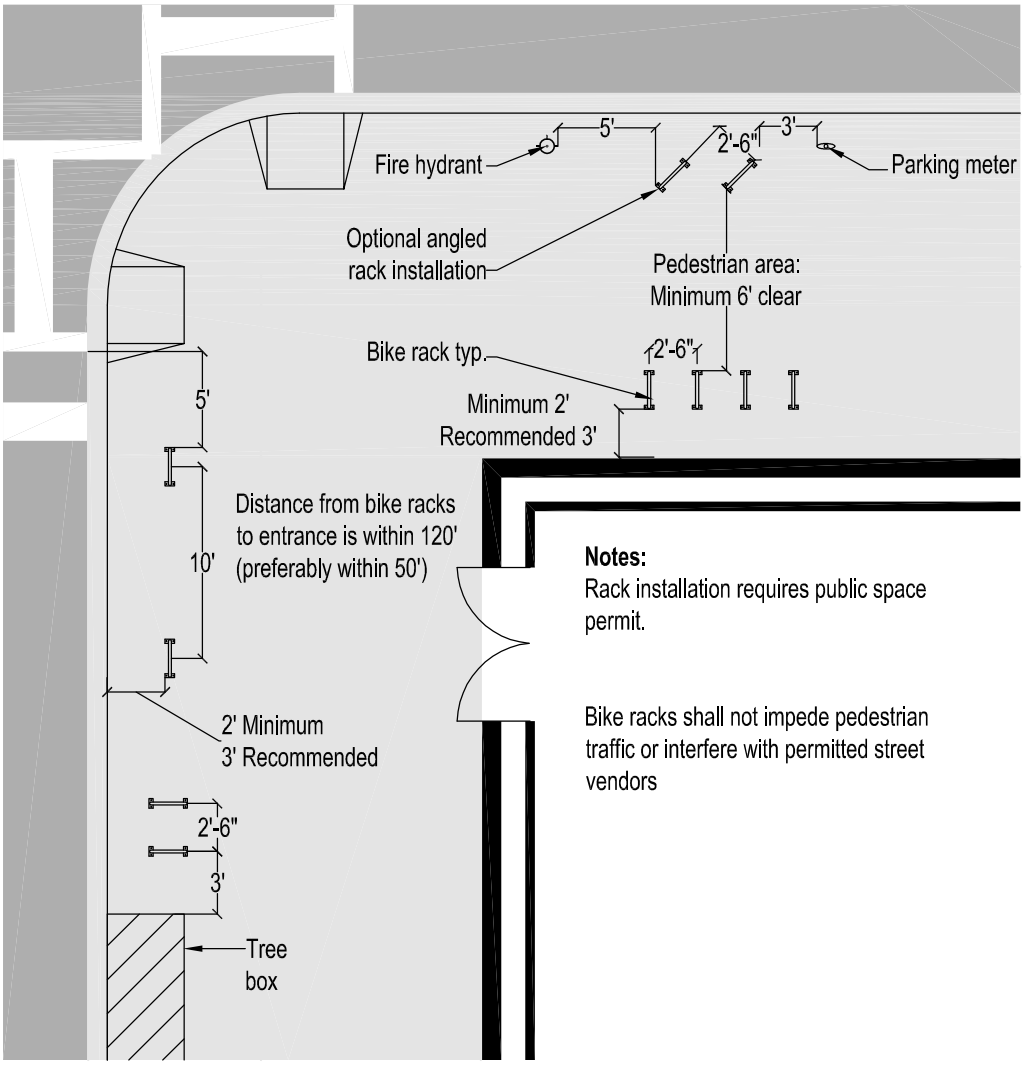

Notes:
Rack installation requires public space permit.

Bike racks shall not impede pedestrian traffic or interfere with permitted street vendors

SCALE 1" = 10'

SIDE VIEW

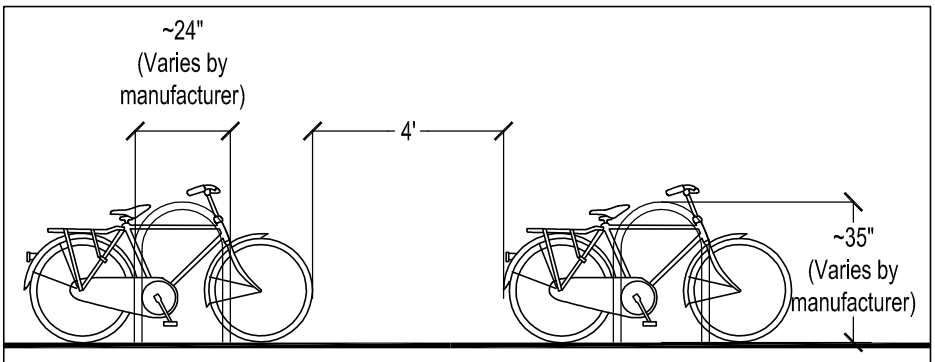

SCALE 1" = 4'

SIDE BY SIDE RACKS:

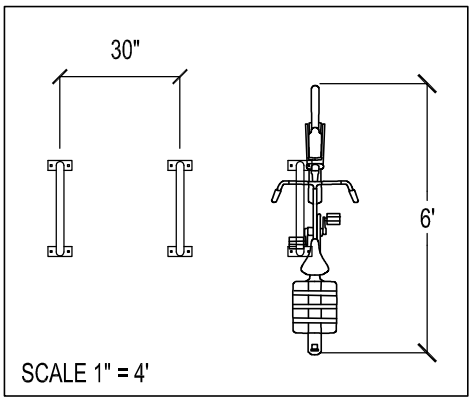

SCALE 1" = 4'